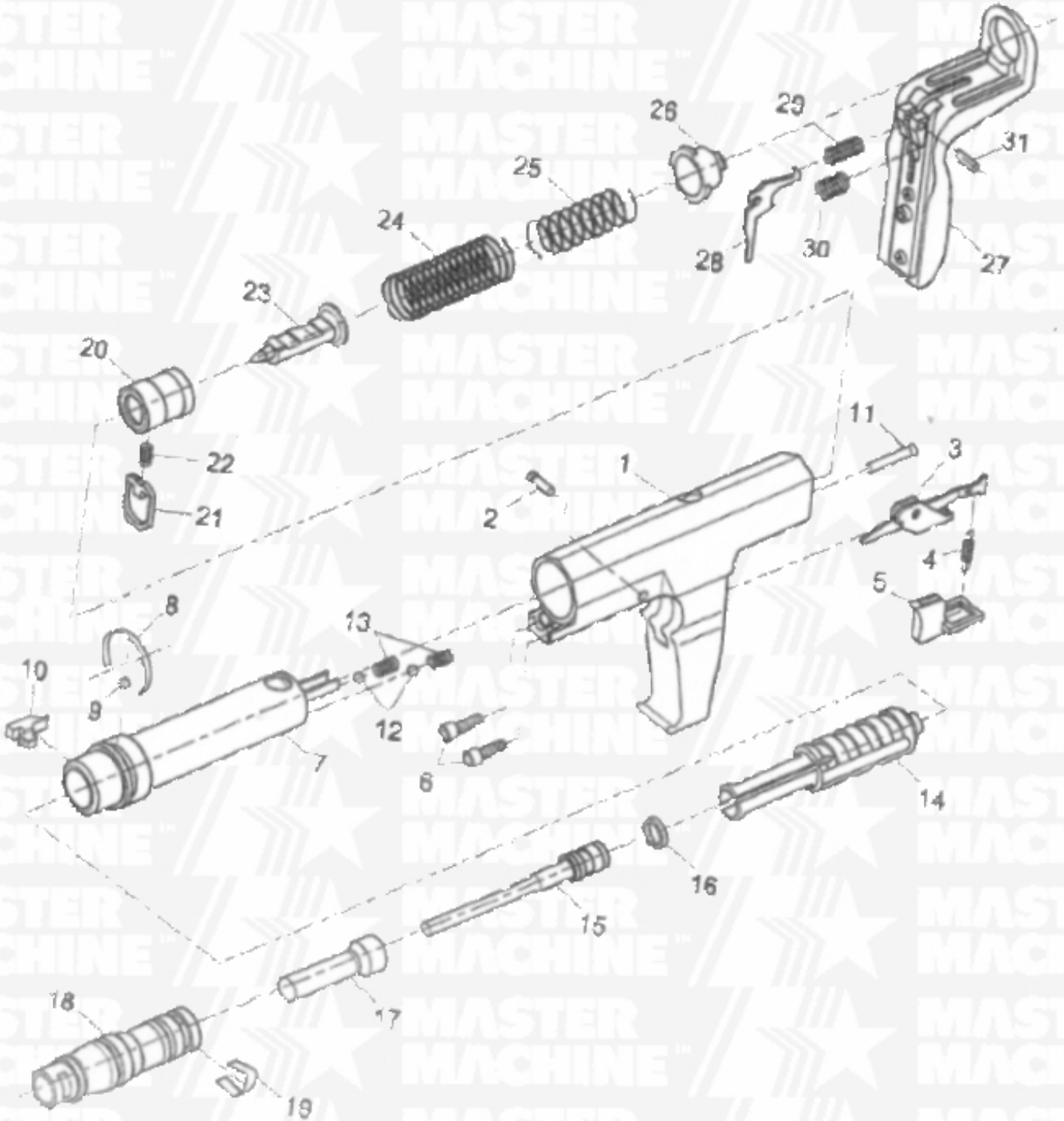

REMINGTON 498

MASTER MACHINE™
(317) 535-6526
1-800-446-INDY (4639)
FAX: (317) 535-6837